Martin Schneider,
Georg Neumann GmbH, Berlin, Germany

Presented at
the 108th Convention
2000 February 19-22
Paris, France

AN AUDIO ENGINEERING SOCIETY PREPRINT

On Developing a Vocalist Condenser Microphone

Martin Schneider

Georg Neumann GmbH, Berlin, Germany

Abstract

Condenser microphones have become more frequent in applications for on-stage use. The advantageous transducer characteristics of condenser microphones in comparison with moving-coil microphones are well known. Progress in public address systems has made it actually possible to notice these differences in standard concert situations. With the increasing demand, the development of highest quality, yet affordable stage microphones has become worthwhile. Aspects of development requirements shall be discussed.

Introduction

Basic requirements for vocalist microphones do not differ in principle from those for standard use microphones. Still, parameters have to be weighted differently. Of the utmost importance are parameters that are only of 2nd rate importance with standard studio microphones:

- Minimized feedback susceptibility
- Minimized sensitivity to plosives
- Minimized sensitivity to wind noises
- Minimized handling noise
- Ruggedness

and not to forget

- Price.

Formerly, only in high quality applications condenser microphones were used on stage, e.g. for parallel broadcasting / recording and amplification purposes. Characteristics typical for highest quality microphones are:

- Optimized frontal incidence frequency response
- Compensation of proximity effect in extreme near-field application
- Uniform polar patterns over the widest frequency range possible
- Insensitivity to climatic influences
- Low current consumption, for possible radio mic applications.

Combining both sets of characteristics into one microphone yields enough space for renewed scrutiny of some transducer characteristics.

Polar Pattern

The vast majority of all microphones are constructed as zero or first order gradient transducers, being the only construction principles yielding a polar pattern largely independant of frequency over the whole audio range. The resulting polar patterns follow the equation

(1) $A[\varphi] = \alpha + (1-\alpha) * \mathrm{Cos}[\varphi]$, $\alpha = 0....1$, $\varphi = 0°....360°$

The requirements of sound reinforcement predestine the choice of polar pattern: cardioid, supercardioid, or hypercardioid. Of all first-order gradient microphones, the hypercardioid, with $\alpha = 0.25$, provides the highest directivity index, and highest gain of direct-to-diffuse field sensitivity of $\Gamma = 6$ dB.

The supercardioid, with $\alpha = 0.366$, yields the highest front-to-rear halfspace ratio, and still a direct-to-diffuse field gain of $\Gamma = 5.7$ dB.

In typical live amplification situations, the monitor speakers will be positioned somewhere in the rear half-space of the microphone. Thus, the supercardioid characteristic as the one with the best front-to-rear halfspace ratio will be the pattern of choice. This supercardioid pattern will have to be optimized over the full frequency range of the transducer.

In general, an absolutely constant polar pattern cannot be achieved over the full 10 octaves of the audio range, due to the vastly differing wavelenghts of treble and bass frequencies. Figure 1 shows the sub-ideal polar pattern of a typical dynamic vocalist microphone, with a direct-to-diffuse field gain of $\Gamma = 4.1...5.9$ dB in the 125 Hz .... 4 kHz region.

Properly constructed condenser microphone capsules can show very equal patterns over many octaves. Still, cardioids will show a tendency toward the omnidirectional at low frequencies, while in the treble the very short wavelengths will lead to a pressure build-up in front of the diaphragm and the transducer will gradually shift from a pressure-gradient to a pressure transducer (Figure 2) [Bor].

Bidirectional (figure-8) capsules on the other hand, due to their absolute symmetry, provide a basically constant polar pattern, even for the lowest frequencies (Figure 3). With the supercardioid lying between cardioid and figure-8, with proper dimensioning of capsule and the surrounding microphone construction, an extremely well-formed polar pattern can be achieved for a condenser vocalist microphone (Figure 4). This example shows a basically constant direct-to-diffuse field gain of $\Gamma = 5.5...5.8$ dB in the 125 Hz .... 4 kHz region

The polar pattern, measured in a plane-wave field, determines the far-field characteristic of the microphone. This means that sound sources at a distance larger than e.g. 1 meter will be, in a first stage, attenuated according to the directional characteristic. That the polar pattern must not show any discrete peaks in the off-axis region is self-evident.

Proximity Effect

Vocalist microphones are used in the extreme near-field, i.e. at distances of 2...10 cm to the sound source. Directional microphones always underlie the well-known phenomenon of proximity effect. In the vicinity of sound sources, the sound field cannot be seen as a plane wave, but much more as a spherical sound field. There, as has been well studied, two effects combine:

- the different path lengths for the sound from source to front and rear of the diaphragm, and

- the overproportional rise of sound particle velocity for low frequencies.

Directional microphones, working as pressure-gradient transducers, thus show a distinct rise in low-frequency sensitivity at close distances. This predominantly for angles in which the path lengths to front and rear of the diaphragm differ the most, i.e. for frontal and rear incidence. The bass boost due to proximity effectively takes on a figure-8 characteristic [Tor]. With polar patterns showing minimal rear half-space sensitivity, e.g. supercardioid, proximity does not have any relevant effect on the behaviour of the transducer for rear sound incidence.

For frontal sound incidence instead, the bass boost can take on dramatic forms, e.g. 24 dB at 50 Hz (Figure 5) [Bor]. Transducer design thus has to partly compensate for this boost, leaving a slight "bass presence" as is often wanted.

Proximity Effect Compensation

While electric compensation might seem the simplest method, acoustic-mechanical compensation is the method closest to the source. In this way, the first electronic stage in condenser microphones, the impedance converter, usually linear in frequency response, is already protected from low-frequency signal overload. With dimensioning the transducer properties correctly, e.g. mechanical diaphragm tension, the frontal frequency response can be smoothly rolled-off towards low frequencies. If called for, the already quite linear signal can then be further optimized electrically to produce the ideal compensation of the proximity effect (Figure 6).

This low frequency roll-off is of course also noticeable in the far-field frequency response (Figure 6). Thus, any distant sound sources will be duly attenuated due to 1.) the decrease in SPL according to the inverse square law, and 2.) the bass attenuation in the far-field frequency response. Microphones operating this way are sometimes misleadingly described as "noise cancelling microphones".

Low-cut Filter

The frequency range of human vocals does not cover the whole range of the audio spectrum. While in the treble, speech components can be well above 10 kHz, even the best classical bass singers, reaching down to G, only graze the 50 Hz mark. As these lowest tones are rarely to be expected in live, reinforced concert situations, one may restrict the range of the transducer by introducing a sharp low-cut electrical filter in the range of 80 Hz, with a steepness of at least 12 dB per octave. This type of filter cannot be realized with simple acoustic-mechanical means.

The helpful effects of this filter are:

- reduction of handling noise,
- attenuation of low-frequent other sound sources,
- reduction of wind noise, as from fricative syllables and breath, and
- reduction of "pop" sounds stemming from plosives.

This leads to the topic of mechanical construction of the microphone grille.

The Microphone Basket

The sound inlet ports are of primal importance for the overall behaviour of a microphone. While the grille should be as open as possible to take full advantage of the transducer's capabilities, it should be as closed as possible in order to attenuate any wind or pop disturbances. Furthermore, it should not adversely affect the polar pattern of the transducer. With a traditional, wire-mesh microphone basket, a careful selection of the mesh-sizes has thus to be performed.

As has been shown earlier [Peu1], it is well possible to attain excellent pop insensitivity with pure wire-mesh constructions. Most of the available vocalist microphones do rely on the attenuating effects of foam layers inside the basket. Although this is certainly a cost-effective procedure, the detrimental effects of this foam layer can be shown quite easily. Treble frequencies are attenuated, and furthermore the polar pattern of the otherwise nicely behaved transducer can be adversely affected [Wut].

Open mesh constructions on the other hand hardly produce any detrimental effect on the transducer's characteristics. Still, with careful dimensioning and selection of different mesh sizes, excellent pop attenuation can be delivered. This effect is well-known also from the standard studio-use pop screens, made of two layers of spaced textile [Sch1&2].

In the current version a combination of four wire meshes with different mesh sizes is used (Figure 7). This combination does actually improve on the polar pattern, while maintaining the unaffected frontal frequency response.

Such a combination can provide also very good wind protection. While it is very simple to obtain excellent wind protection with open-foam wind screens, or large-size wind-shield baskets as used in outdoors recording applications, mesh sizes have to be properly selected for small sized, mesh-only baskets as in vocalist microphones.

Ruggedness for on-stage use calls for a hardened-steel outside microphone basket.

Frontal Frequency Response

The low frequency aspect of vocal sound reinforcement has been discussed above. One further important parameter in sound modelling is the mid-range to treble region. A slight boost of 2...3 dB in the high mid-range to treble region does help in providing the vocalist a dominant spot in the full spectrum of an instrumental ensemble. Still, in contrast to simpler designs, a balanced frequency response in the extreme near-field should not resemble a typical "loudness" curve, with pronounced bass and treble components only. While some "warped" frequency responses might be flattering to one or the other vocalist, and generally a slight bass boost is felt to be helpful, a general purpose vocalist microphone should provide a smooth, mainly flat on-axis frequency response (Figure 6).

Seldom are hand-held microphones addressed at exactly 0° frontal incidence. Frequency response thus has to be maintained over an angle as wide as possible. With optimized polar patterns and acoustically transparent basket construction, parallel frequency response curves are obtained for an angle well exceeding the typical addressing angle of +/- 45° (Figure 8).

Impulse Response

Impulse response measurements have long been a device to establish the faithfulness of a transducer in reproducing the actual sound signal [Peu2]. While this may seem not so much of importance in vocalist microphones, such measurements do help the developer in assessing the acoustical effects of the mechanical construction (microphone grille and housing).

As shown [Sch1, Wut], foam filters do impede high frequency resolution, traceable in frequency response measurements as well. Furthermore it can be established that no excessive reflections take place inside the microphone housing, as would be experienced in the presence of solid, reflecting surfaces.

A fine impulse response establishes that frequencies well into the upmost limits of the audible range can be transmitted without any losses (Figure 9).

The Microphone Housing

Dimensions of vocalist microphones are determined by the human hand, leaving not many free parameters. With length, diameter and weight established, the main requirement lies on the suppression of handling noise. Elastic mounting of the transducer is thus called for. Any elastic mounting does yield certain resonance frequencies. With the restricted weight of any small size transducer, these resonances can hardly be shifted as low as to be below the useful frequency range, i.e. below say 20 Hz. Furthermore, any resonances in the low frequency range would be bound to produce unwanted, "rumbling" handling noise. A fairly hard, non-resonant coupling of materials is thus called for. With proper choice of the finish, rubbing and other handling noises can then be suppressed to a satisfying extent. The electrical low-cut filter below 80 Hz does further attenuate any predominantly low-frequent handling noise.

Self-noise

Condenser microphones can feature self-noise levels lying actually below the human threshold of hearing [Sch3]. Hardly any recording studio can provide facilities taking advantage of the full extent of such extremely low noise levels. For stage applications one may certainly allow a slightly higher self-noise level in a microphone. Still, self-noise should not be excessive, as one may not exclude studio use on principle.

A value of e.g. 18 dB-A can easily be reached with a small diaphragm capsule and straight-forward circuitry dimensioning, without producing any excessive cost to the end user.

Signal Levels

The human voice can produce amazingly high sound pressure levels in the extreme near-field. Even at larger distances of, say, 20...30 cm, sound pressure level peaks of more than 120 dB can be experienced. This is partly due to the very high crest factor of human speech. On the other hand, plosives can produce extremely low-frequent, high energy air motion[Sch2]. While the latter can be attenuated with proper pop protective mechanical construction, peaks present in the actual vocal signal should not be cut off. The circuitry has thus to allow for electrical signals corresponding to sound pressure levels up to 150 dB.

The critical stage will always be the first stage in the electrical chain, i.e. the impedance converter. As mentioned above, self-noise is not the main criterion in the design of a stage

microphone. The sensitivity of the actual acousto-mechanical transducer can thus be chosen so as to assure not to overload the impedance converter. With a maximum output level of e.g. +11 dBu, a sound pressure level of 150 dB can be transmitted without any distortion.

An output voltage of +11 dBu corresponds to an RMS voltage of 2.75 volts, or 3.9 volts peak! This may be a level already critical with some sub-standard or semi-professional devices, although it is a value quite typical with high standard microphones. Care should be thus taken that gain potentiometers at pre-amplifiers or mixing consoles be set to values allowing some headroom for the very high signal levels sometimes produced by vocalists. Frequently, inexperienced users blame clipping of the signal on the microphone, while in most cases it is actually a pre-amplifier limitation!

Climatic Stability

Stage microphones are used in minimal distance to an extreme source of humidity: the mouth. As is well-known, most condenser microphones rely on very high impedance circuitry as a first stage. In contrast to most other studio microphones which are operated at larger distances, with protective pop screens or foam windscreens, a vocalist stage microphone capsule has thus to be extremely insensitive to humidity. This can be achieved by having all outside surfaces including the diaphragm on ground potential, and furthermore by making any insulating paths to the rear electrode as long as possible. And as inaccessible to humidity as possible, without obstructing the acoustical path for the sound waves.

Input circuitry, as inaccessible as it might be placed inside the housing, has to be protected against any humidity creeping into the housing. An especially selected, protective lacquer is imperative. Proper selection of materials for capsule construction furthermore takes care of temperature dependant changes of microphone characteristics.

Furthermore, with a properly designed microphone, specifications must not alter relevantly, even with excessive climatic conditions. Type tests in climatic chambers, with temperatures up to 70° C and 99% humidity, reveal the constancy of the crucial parametes (i.e. the capacitances) in a well-designed condenser capsule (Figure 10).

Further Circuitry Requirements

The main aspects of the circuitry have been described in the above. Even in stage applications one can today be assured that also budget equipment will provide P48 phantom powering. The studio standard can thus be used on-stage as well. One further criterion can still be current consumption. While this aspect will be irrelevant for any powering coming from a large size console, current consumption should be held small for the case of utilization in combination with a plug-on radio transmitter. As properly dimensioned circuitry can function with a current of say 3.5 mA, even with excessive sound pressure levels as they are experienced in extreme close-miking situations, no excessive load is posed upon any transmitter circuitry necessating much higher currents.

Conclusion

As has been shown, a high quality vocalist condenser microphone can be designed without recourse to cost-intensive special production materials or techniques. Studio quality can thus be transferred to the stage without adding extensive cost. Proper selection of production

techniques and transducer design can assure the highest quality of vocal sound reinforcement. Frequency response and polar patterns can be optimized for the whole relevant frequency range, and a wide acceptance angle, resulting in excellent feedback protection. Given high-quality public address systems, the audience can then experience best quality even in concert situations.

Acknowledgements

Thanks to C. Glodek, K. Mikat, A. Sablotny, M. Spahrmann for help in preparing the graphics in no time. And all colleagues in R&D, for the KMS 105.

Literature

[Bor] Boré, Dr. Gerhart & Stephan Peus, Microphones – Operating Principles and Type Examples, Georg Neumann GmbH, 4th edition, 1999

[Peu1] Peus, Stephan, On the Development of a New Vocalist Microphone, held at AES Italy Meeting, October 1991, Georg Neumann GmbH

[Peu2] Peus, Stephan, Microphones and Transients, dB Magazine, May 1977

[Sch1] Schneider, Martin, Pop Measurement, Low Frequency Response and Microphone Construction, Preprint 4675, 104th AES Convention, Amsterdam, 1998

[Sch2] Schneider, Martin, Transients in Microphones: Pop and Impulse, AES U.K. Conference

[Sch3] Schneider, Martin, Eigenrauschen und Dynamikumfang von Mikrophon und Aufnahmekette, Proc. of 20th Tonmeistertagung, Karlsruhe, 1998

[Tor1] Torio, Guy, Directional Characteristics, in Proc. AES U.K. Conference 1998

[Wut1] Wuttke, Joerg, Microphones and Wind, JAES, Vol.40, No.10, November 1992

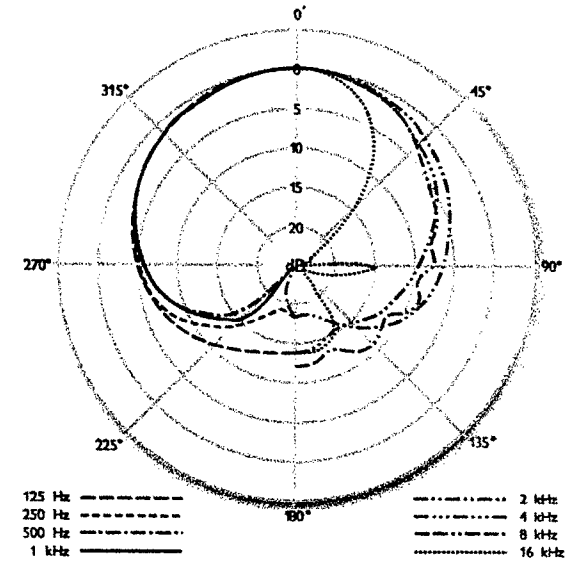

Fig. 1: Cardioid Polar Pattern of Dynamic Vocalist Microphone

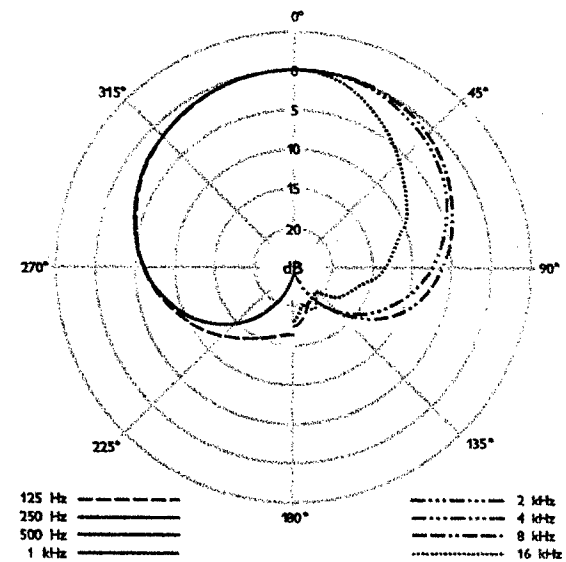

Fig. 2: Cardioid Polar Pattern of a Standard Small Diaphragm Microphone

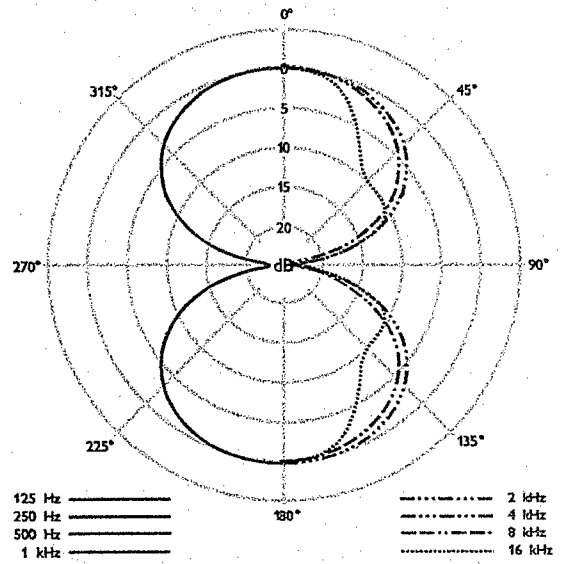

Fig. 3: Figure-8 Polar Pattern of a Standard Small Diaphragm Microphone

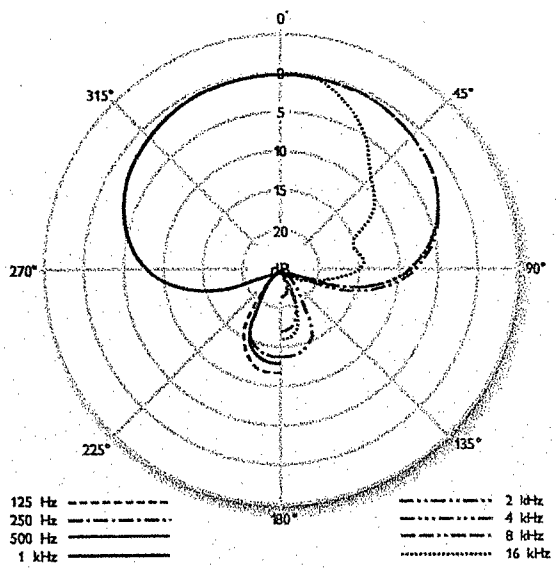

Fig. 4: Supercardioid Polar Pattern of the New KMS 105 Vocalist Condenser Microphone

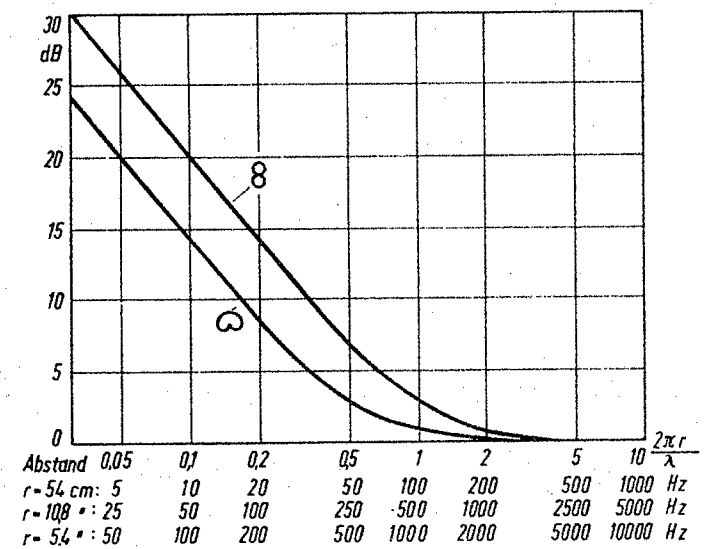

Fig. 5: Pressure Gradient Transducer Frontal Incidence Bass Boost Due to Proximity Effect from: [Bor]

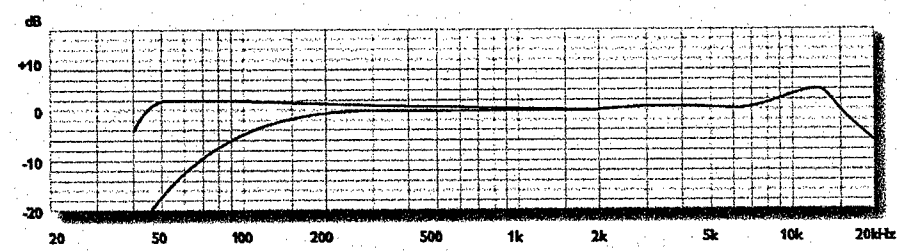

Fig. 6: Frequency Response of KMS 105 Vocalist Microphone in the Near Field (10 cm approx.) and in the Free Sound Field

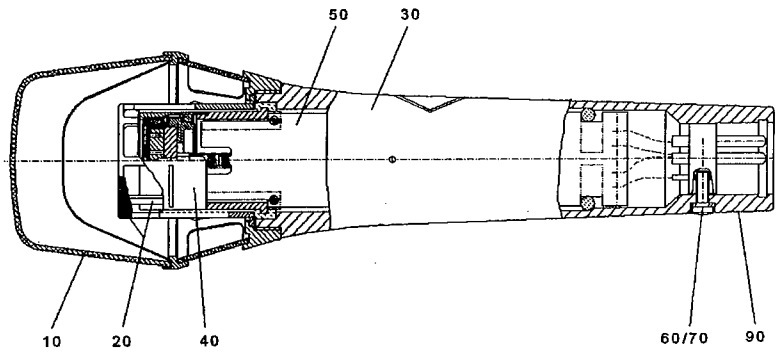

Fig. 7: Schematic View of KMS 105 Vocalist Microphone with 4 Protective Gauzes

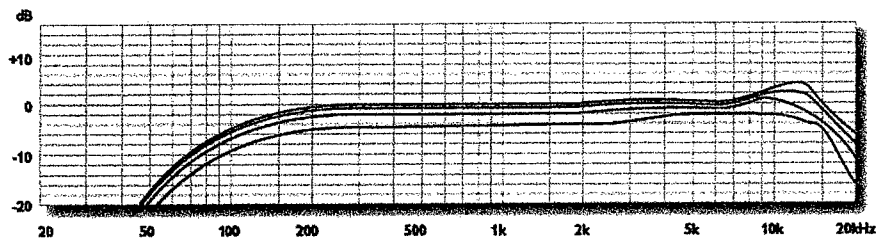

Fig. 8: KMS 105 Frequency Response at Various Angles 0° / 22° / 45° / 67°

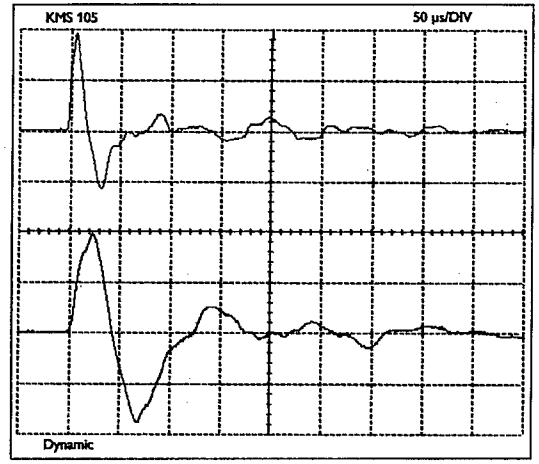

Fig. 9: Impulse Response of KMS 105 Condenser Microphone (above) and a Standard Dynamic (below) Vocalist Microphone

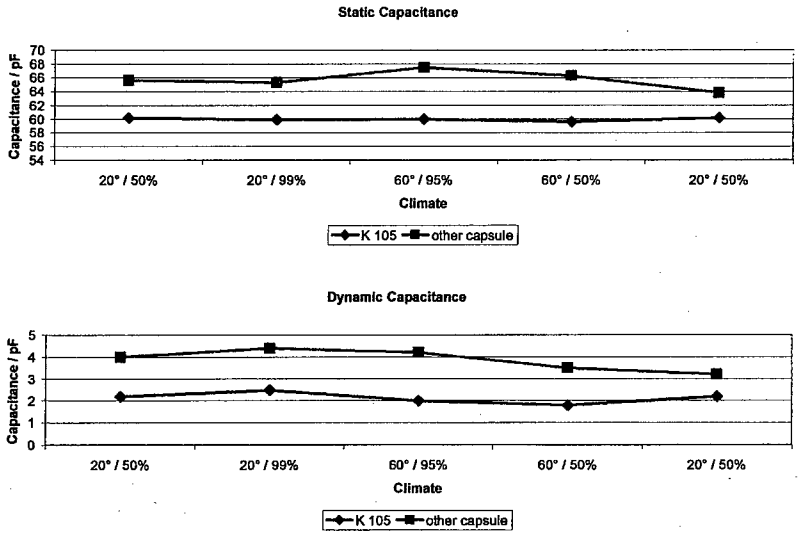

Fig. 10: Constancy of Condenser Capsule Capacitance in Climatic Chamber Test: KMS 105 and Non-ideal Example